Specialty Foundation, Marine and Aquatic Consulting, Engineering and Inspection

MW ENGINEERING, INC.

Marine, Civil, and Aquatic Engineering Design and Inspection

With more than 20 years of professional experience, MW Engineering Inc., specializes in Specialty Foundation, Marine and Aquatic Engineering and Inspection.

POOL AND SPA DESIGNS, INC. AQUATIC ENGINEERING

For Aquatic design, commercial and high end residential clients MW Engineering partners with ***Pool and Spa Designs, Inc.***

Our General Engineering Services Include:

- Aquatic Design, Engineering and Inspection
- Dock Inspection, Design and Permit Plans
- Seawall Inspection, Design and Permit Plans
- Foundation Inspection, Underpinning, Repair and Mitigation
- Batter and Auger Pile Installation, Monitoring, and Certification

SEAWALL / DOCK

- Wood Piles
- Precast Piles
- Sheet Pile
- Concrete Panel
- King / Batter Pile
- Tiebacks

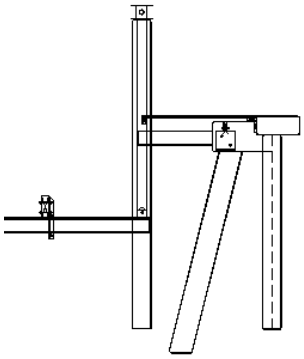

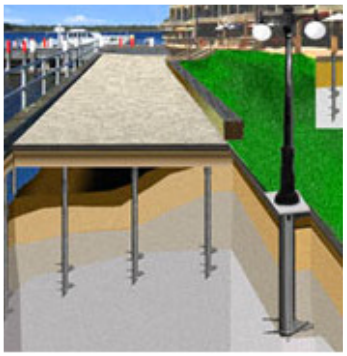

FOUNDATIONS

- Slab on Piles
- Helical / Pin Piles
- Auger Piles
- Underpinning
- Push Piers
- Slab Piers

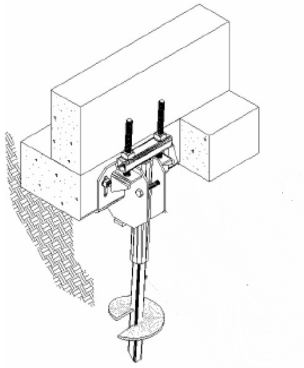

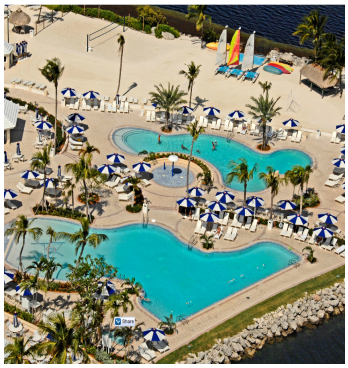

AQUATIC FACILITIES

- Therapy Facilities
- Commercial Pools
- Slides
- Fountains
- Interactive Features
- Fountains
- Spas

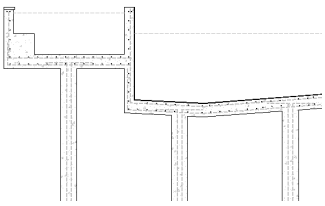

Mark Weber, P.E.
Licensed Professional Engineer
Cell: 561-305-0476
MarkWeber@MwEngineering.net

MW Engineering, Inc.
1220 NE 23rd Ave
Pompano Beach, FL 33062

For More Information Visit: www.MwEngineering.net